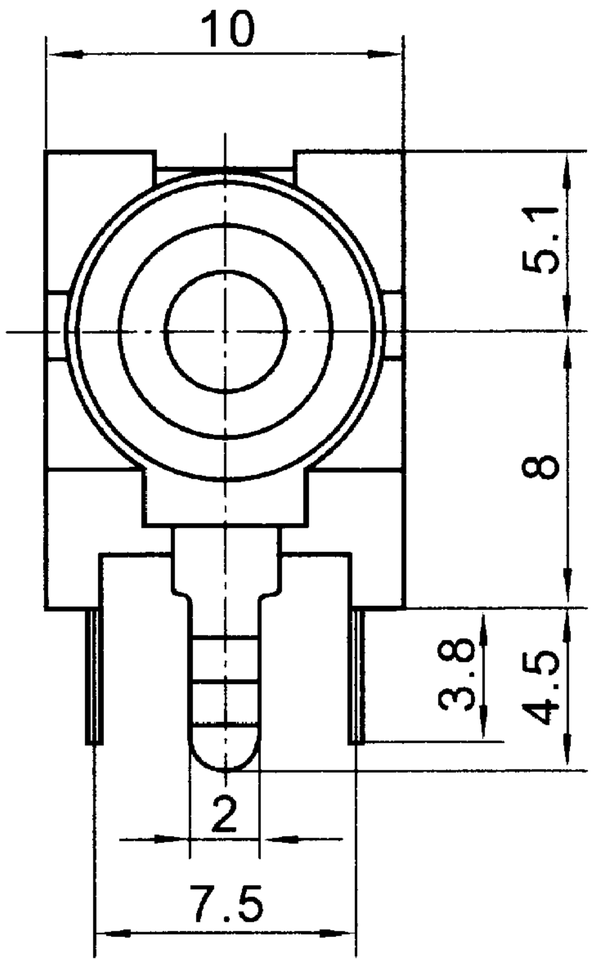
10
5.1
8
3.8
4.5
2
7.5

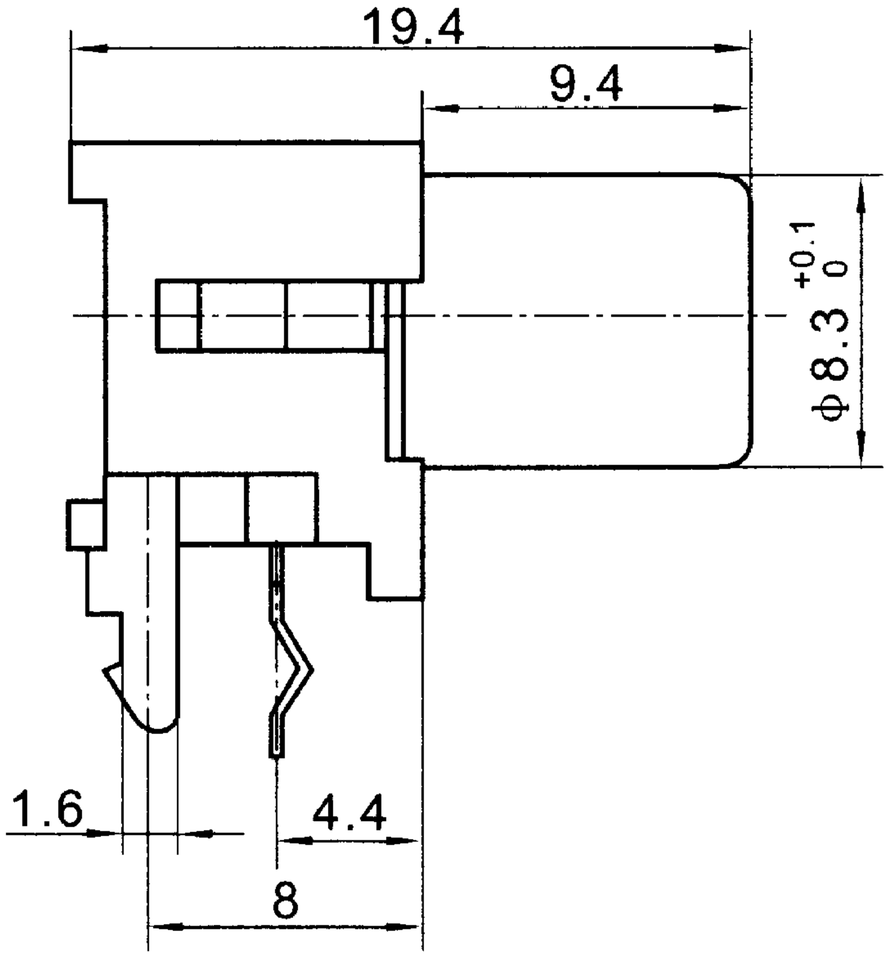
19.4
9.4
φ8.3 +0.1 0
1.6
4.4
8

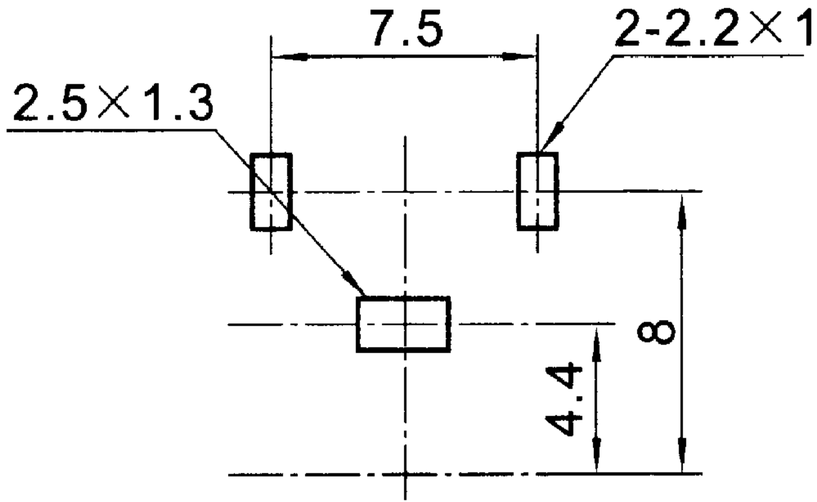
7.5
2-2.2×1
2.5×1.3
8
4.4