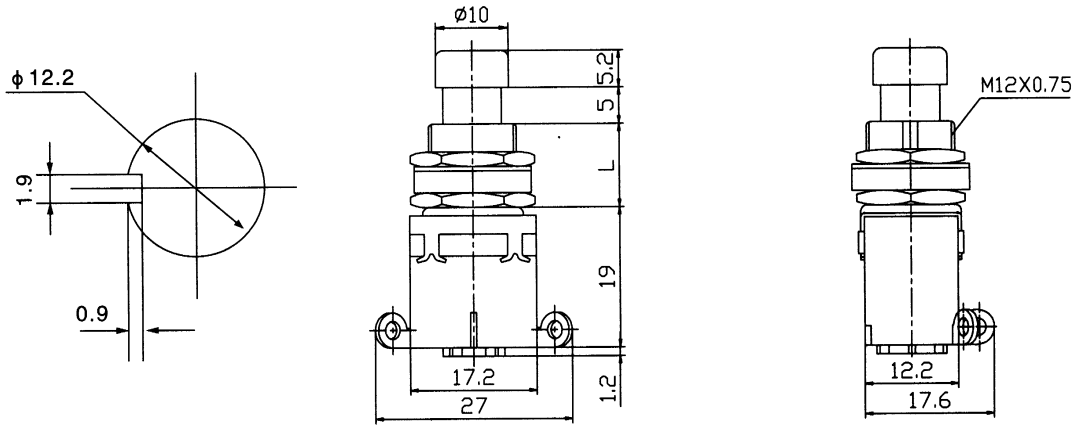
ϕ12.2
1.9
0.9
Ø10
5.2
5
L
19
1.2
17.2
27
M12X0.75
12.2
17.6