C			xushiyong 08.04.16		REVISION RECORD				
					REV	ECO	DESCRIPTION	DRFT	CHKD
					A			PEILEI 06.03.05	
					B			xushiyong 07.02.02	

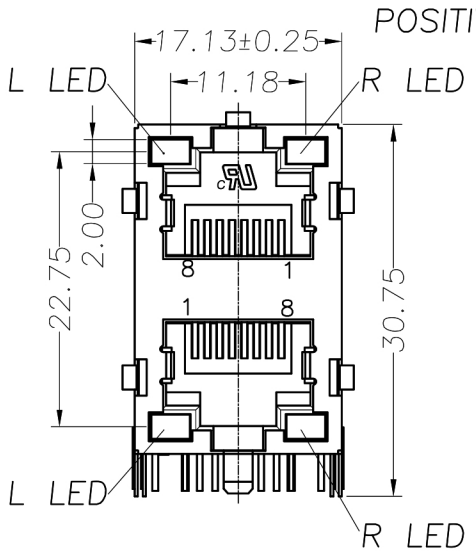

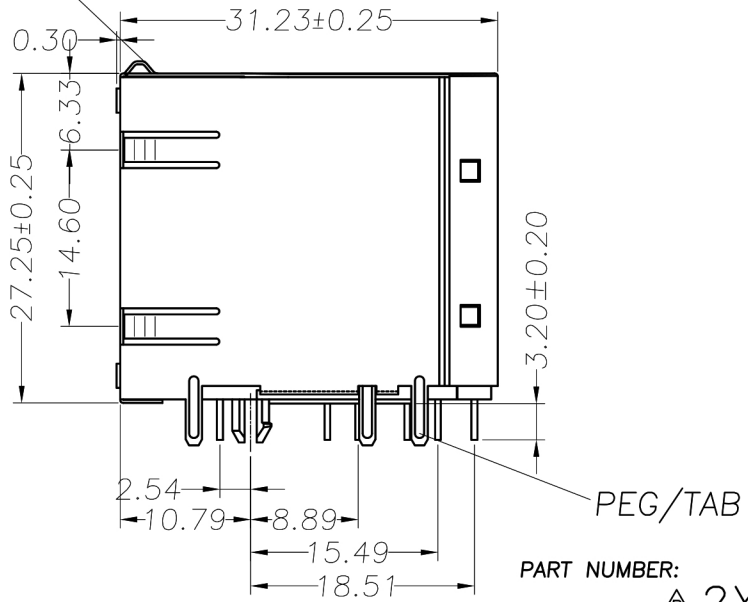

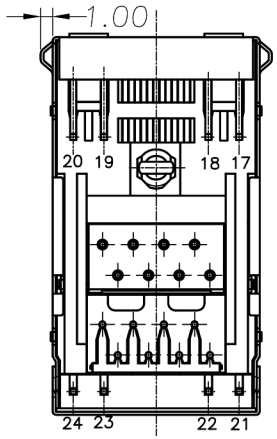

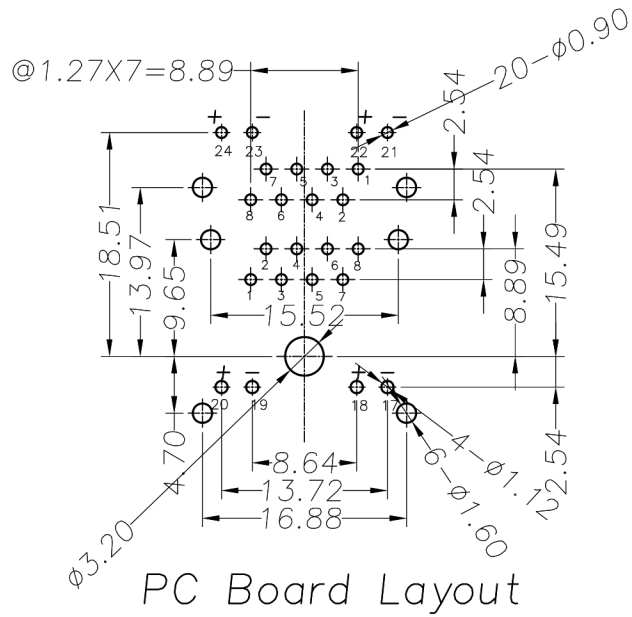

PC Board Layout

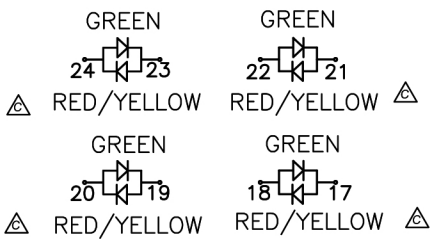

NOTES:

MATERIAL:

1. HOUSING MATERIAL :GLASS FILLED POLYESTER(UL94V-0).
2. CONTACT MATERIAL :PHOSPHOR BRONZE ø0.46mm
3. PLATING :GOLD PLATING OVER NICKEL.
4. SHIELD: COPPER ALLOY 0.20mm THICKNESS PLATING NI.
5. LED: OPTION.

ELECTRICAL:

1. VOLTAGE RATING :125 VAC RMS.
2. CURRENT RATING :1.5 AMP.
3. CONTACT RESISTANCE :50 MILLIOHMS MAX.
4. INSULATION RESISTANCE :500 MEGOHMS MIN @ 500V DC.
5. DIELECTRIC WITHSTANDING RESISTANCE :1000V AC RMS 50Hz. 1MIN.
6. LED RATINGS:FORWARD VOLTAGE:2.2 VOLTS TYPICAL. REVERSE VOLTAGE:5 VOLTS MAXIMUM.

MECHANICAL:

1. DURRABILITY :750 CYCLES MIN.
2. PCB RETENTION PRE-SOLDER :1 LB MIN.

ENVIRONMENTAL:

1. STORAGE :-40°C TO +85°C.
2. OPERATION : 0°C TO 70°C.

MATES WITH MODULAR PLUG CONFORMING TO FCC PART 68,SUBPART F.

PART NUMBER:

B 2XNB-0312X1X13X

2XNB SERIES PCB JACK

SHIELD:
1-W/O SHIELD . 3-FULL SHIELD

PORTS
1-2X1 . 2-2X2 : 4-2X4
6-2X6 . 8-2X8

EMI
1-W/O EMI
2-W/ POSITIVE EMI
3-W/ REVERSE EMI

LED STYLE
1-L LED: GREEN, R LED: YELLOW;2-L LED: YELLOW, R LED: GREEN
3-L LED: GREEN, R LED: GREEN ;4-L LED: RED, R LED: GREEN
5-L LED: YELLOW, R LED: YELLOW ;6-L LED: GREEN, R LED: RED
7-L LED:GREEN+RED , R LED:GREEN+RED
8-L LED , R LED

GOLD PLATING
1-F U". 2-1.5U". 3-3U". 4-6U".
5-15U". 6-30U". 7-50U"

LOGO
0-W/O LOGO
1-W/ HAXN
2-W/ UL
3-W/ HAXN. UL

COLOR:1-BLACK

PLASTIC
1-PBT. 2-NYLON66 3-NYLON46

PIN STYLE
1-ROUND PIN . 2-FLAT PIN

DETACHED LISTS	MM (INCH)				
	MM		GANBO	06.03.05	
	.0 ±0.20	±	xushiyong	06.03.06	
	.00 ±0.15	±			
	.000 ±0.075	±			