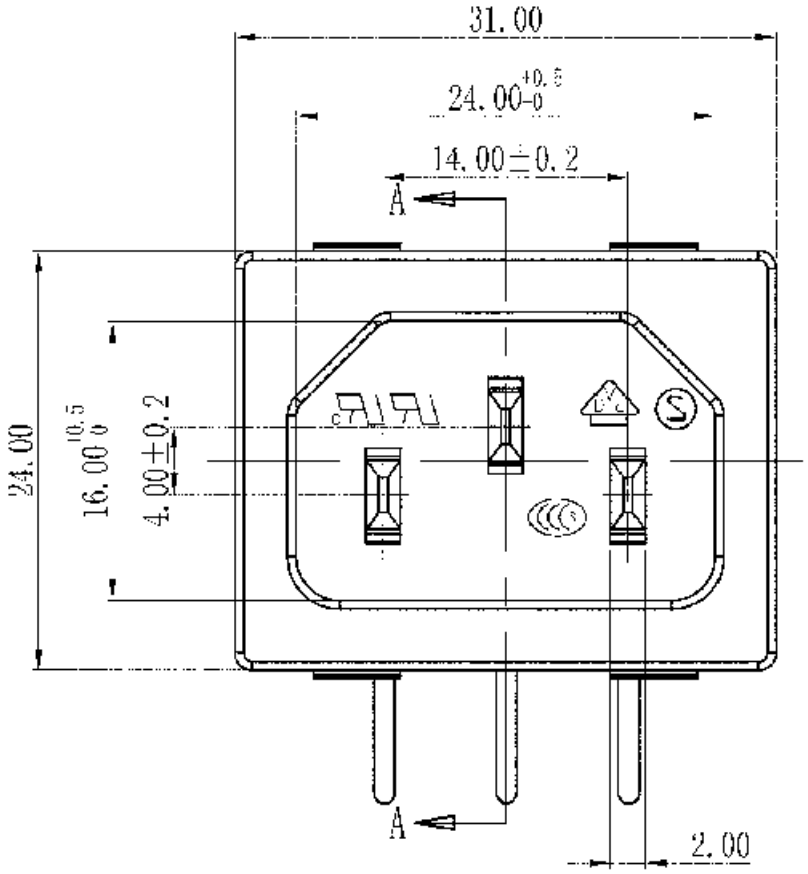
31.00
24.00 +0.5 -0
14.00±0.2
A
24.00
16.00 +0.5 0
4.00±0.2
A
2.00

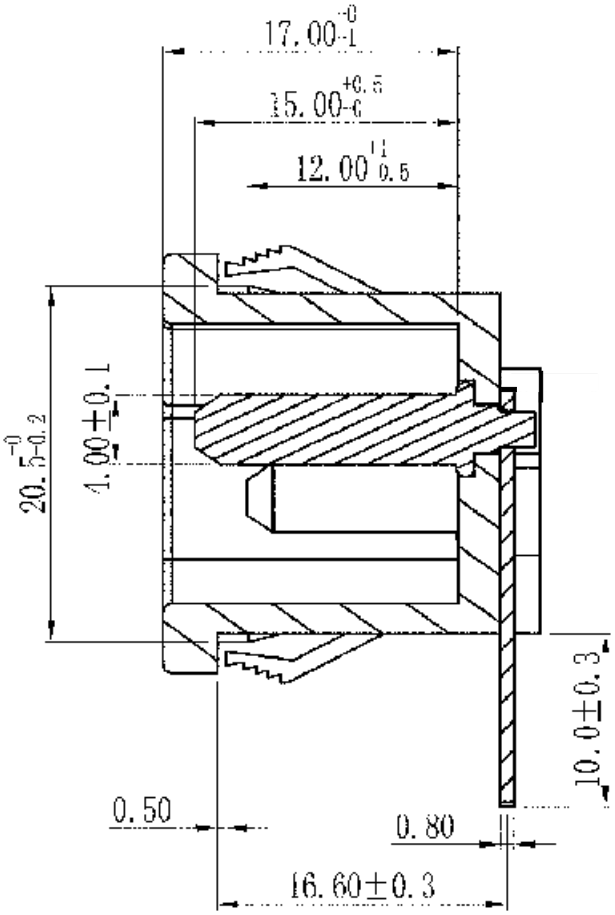
17.00 -0 -1
15.00 +0.5 -0
12.00 +1 -0.5
20.5 -0 -0.2
4.00±0.1
10.0±0.3
0.50
0.80
16.60±0.3

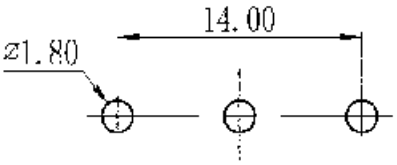
14.00
z1.80

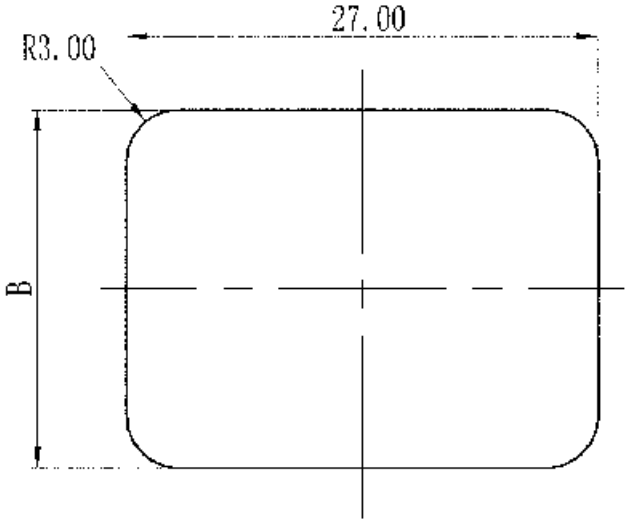
27.00
R3.00
B